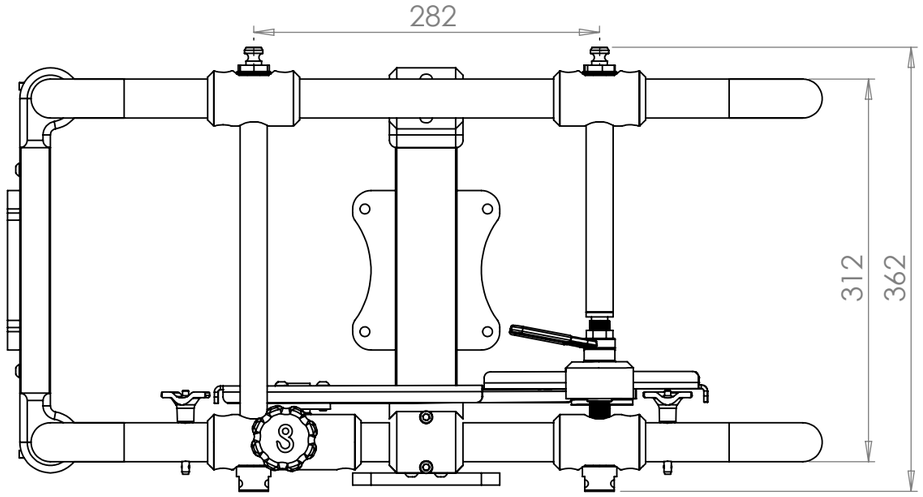

SIDE VIEW

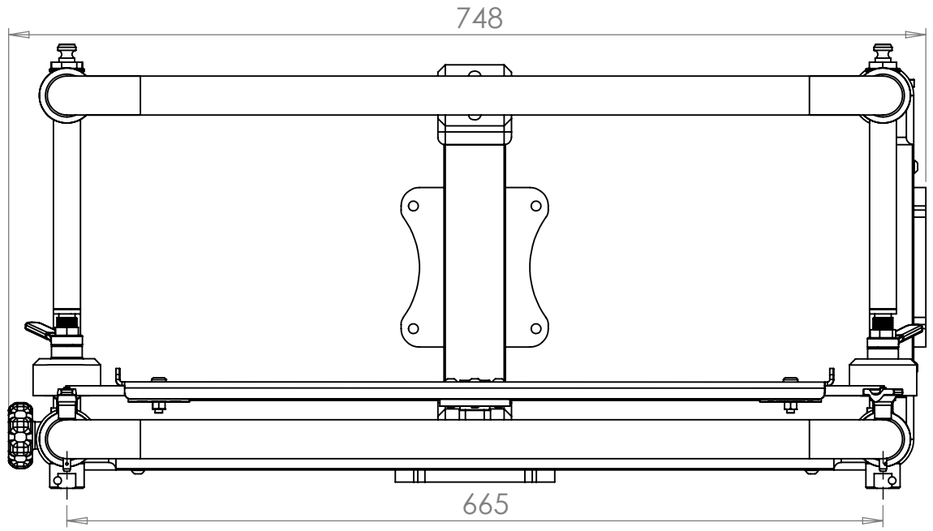

FRONT VIEW

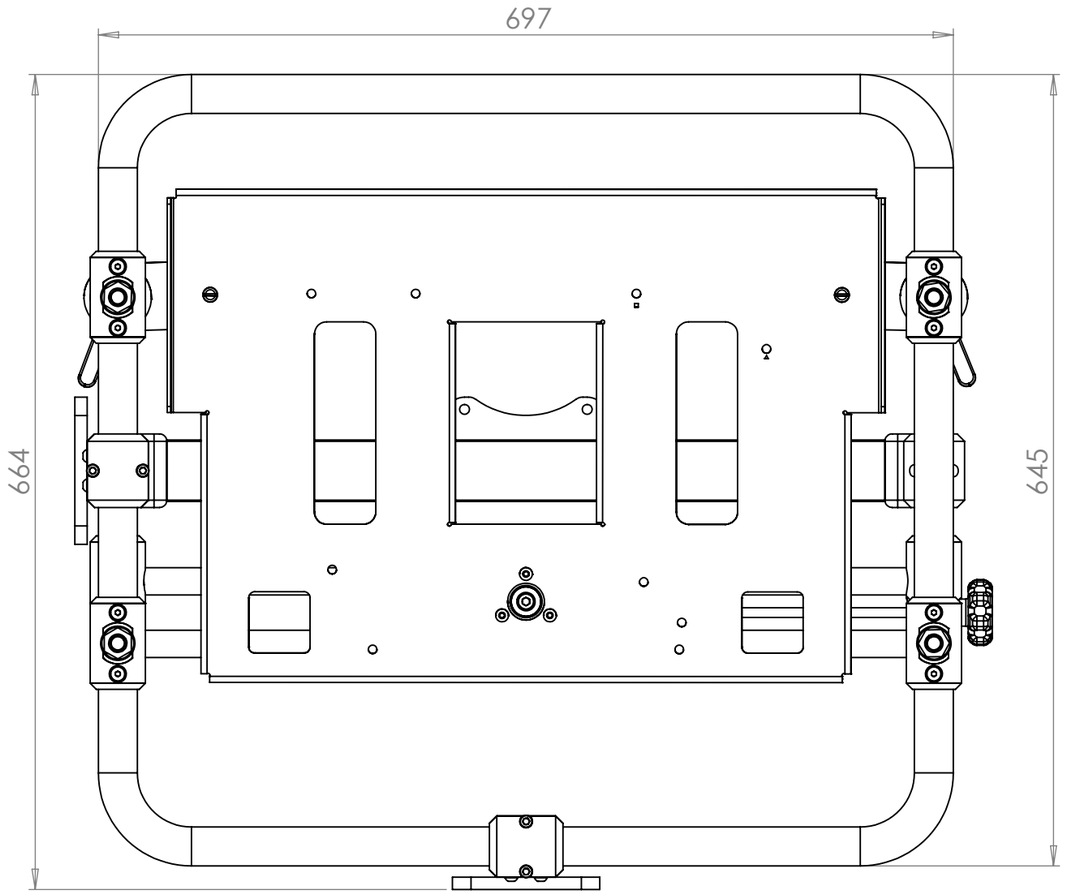

TOP VIEW

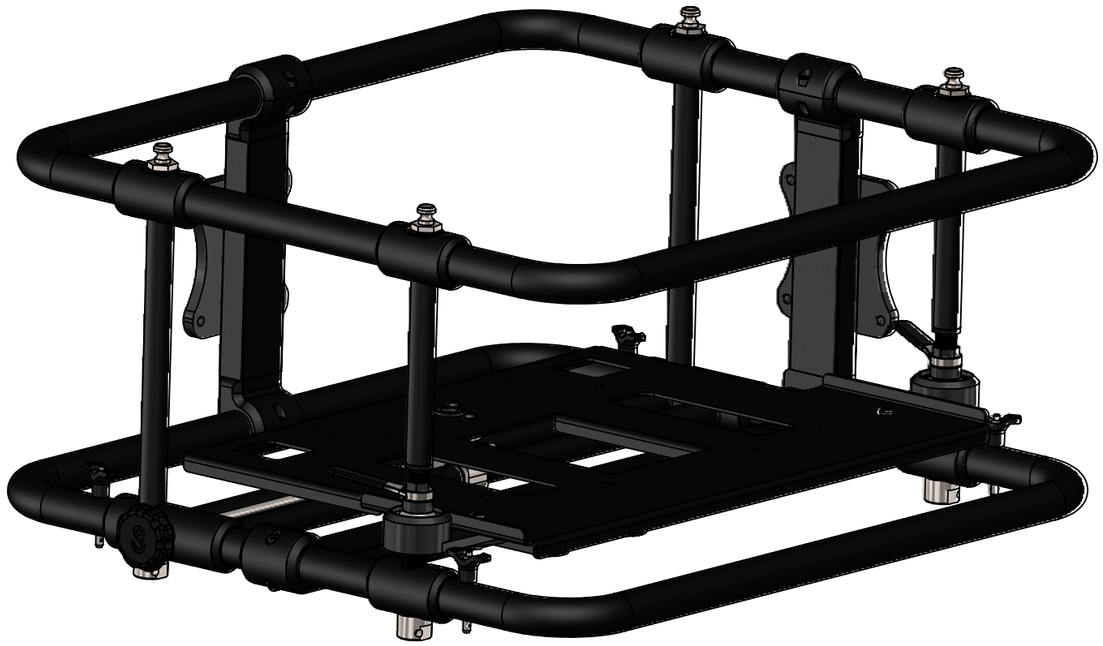

rigtec

THE DESIGN AND DRAWING SHOWN IS THE PROPERTY OF CENTRAL PRESENTATIONS LTD. THEY MUST NOT BE USED OR COPIED WITHOUT CONSENT.

REMOVE ALL BURRS, BREAK SHARP EDGES AND FLASH

DO NOT SCALE DRAWING

FINISH:

MATERIAL:

UNLESS OTHERWISE SPECIFIED DIMENSIONS ARE IN MILLIMETERS

QUANTITY:

DRAWN BY: V FERNANDES

DATE: 09/09/2019

TITLE: AIR FRAME X-30

PART NO. AF01-X30

A3

SCALE:1:5

SHEET 1 OF 1